Biomedical Signal Processing and Control 90 (2024) 105858

Contents lists available at ScienceDirect

Biomedical Signal Processing and Control

journal homepage: www.elsevier.com/locate/bspc

A deep learning outline aimed at prompt skin cancer detection utilizing gated recurrent unit networks and improved orca predation algorithm

Li Zhang [a,*], Jian Zhang [a], Wenlian Gao [a], Fengfeng Bai [a], Nan Li [b], Noradin Ghadimi [c,*]

[a] Department of Computer Science and Technology, Lyuliang University, Lvliang 033000, China
[b] AIMCNT Research Center, School of Automation, Northwestern Polytechnical University, Xi'an 710129, China
[c] Young Researchers and Elite Club, Islamic Azad University, Ardabil Branch, Ardabil, Iran

ARTICLE INFO

Keywords:
Automatic diagnosis
Deep learning
Gated recurrent unit network
Improved orca predation algorithm
Medical image analysis
Skin cancer

ABSTRACT

Skin cancer is a risky ailment that can be effectively managed if detected promptly. However, timely recognition of skin cancer remains a challenge. In this study, a robotic computer-assisted tactic is proposed for the early detection of skin cancer. The motivation behind this research is to improve the accuracy and efficiency of skin cancer recognition. The proposed methodology involves a series of steps. Initially, the input images undergo preprocessing to enhance their quality and extract relevant features. These preprocessed images are then fed into a Gated Recurrent Unit (GRU) Network, a type of deep learning model known for its ability to capture sequential information. To optimize the performance of the GRU Network, we employ an enhanced variant of the Orca Predation Algorithm (OPA). This algorithm helps fine-tune the network parameters, improving its diagnostic capabilities. To validate and evaluate the effectiveness of our skin cancer diagnosis algorithm, we conducted experiments using the HAM10000 dataset, which contains a large collection of skin lesion images. We compared the results obtained from our proposed method, named GRU/IOPA, with eight existing techniques commonly used for skin cancer diagnosis. Five execution indices, namely sensitivity, specificity, positive predictive value (PPV), negative predictive value (NPV), and accuracy, were used to assess the performance of these methods. Our findings demonstrate that the GRU/IOPA system outperforms other existing methods in terms of sensitivity (0.95), specificity (0.97), PPV (0.95), NPV (0.96), and accuracy. These results indicate the effectiveness of our proposed method in diagnosing skin cancer compared to traditional approaches. The superior performance of GRU/IOPA highlights its potential impact on improving skin cancer diagnosis and reinforces its promise as an advanced tool in the field. In conclusion, our study presents a novel approach for timely skin cancer recognition through a robotic computer-assisted tactic. By utilizing the GRU/IOPA system, we achieve superior accuracy and efficiency in diagnosing skin cancer compared to existing techniques. This research offers significant contributions to the field of skin cancer diagnosis and opens up new avenues for future advancements in this area.

1. Introduction

1.1. Background information on skin cancer

In 2023, there would be 97,610 adults that will suffer from skin cancer in the USA. Of these cases, 39,490 will be diagnosed in women and 58,120 in men [1]. The issue at hand poses an important threat to public health. A disease that influences the skin and has various types is skin cancer [2]. The most popular skin cancers are basal cell carcinoma, squamous cell carcinoma, and Melanoma. Nonetheless, there exist other skin cancer's forms [3]. In the United States, a form of cancer that affects males is Melanoma which is ranked as the sixth most prevalent [4]. Furthermore, within the female population, breast cancer ranks as the sixth most commonly occurring type of cancer [5]. According to statistical data, white individuals are affected by melanoma at a rate that is twenty times higher than that of black individuals [6]. The typical age for diagnosis is 65 [7]. Studies have shown that melanoma is more frequently diagnosed in females than in males before the age of fifty [8]. According to the National Cancer Institute [9], men are at an elevated risk of developing cancer after the age of fifty [10].

Exposure to Ultraviolet (UV) radiation is identified as the skin cancer's primary source, with as much as 90 % of cases attributed to UV

* Corresponding authors.
E-mail addresses: lluzhli@163.com (L. Zhang), nghadimi1985@gmail.com (N. Ghadimi).

https://doi.org/10.1016/j.bspc.2023.105858
Received 22 July 2023; Received in revised form 25 November 2023; Accepted 12 December 2023
Available online 22 December 2023
1746-8094/© 2023 Elsevier Ltd. All rights reserved.

exposure from tanning salons or the sun [11]. Factors that can elevate the risk of developing skin cancer include having fair skin, experiencing sunburns in the past, having a weakened immune system, and exposure to environmental toxins such as arsenic [12].

The conventional diagnostic tools for skin cancer include visual examination, dermoscopy, and biopsies [13]. However, these treatments present various disadvantages, including subjectivity and the requirement of invasive procedures. Initial detection has a crucial impact in the effective skin cancer's management [14]. Localized melanoma has a five-year survival rate of 99 %, whereas metastatic melanoma has a survival rate of only 27 % [15].

Public health programs aimed at preventing skin cancer include public education campaigns, which promote the use of sunscreen and protective gear, and urge people to avoid tanning beds [16]. Despite the considerable efforts that have been made, the skin cancer's prevalance is still enhancing, emphasizing the necessity for novel and innovative methods to diagnose and treat this disease [17].

1.2. Computer-aided diagnosis (CAD)

CAD is a recently developed field that utilizes computer algorithms to improve the accuracy and efficiency of medical diagnoses. CAD systems are utilized in the diagnosis of skin cancer by employing image processing and machine learning techniques to assess digital images of skin lesions. The system provides diagnostic recommendations to medical professionals.

CAD systems have the capability to assist in identifying, segmenting, and categorizing skin lesions. This potential ability can reduce the necessity for invasive treatments like biopsies. Medical practitioners can be aided in making more precise diagnoses by utilizing objective and quantitative assessments of skin wounds, which may be provided by assistants. The elimination of subjectivity and unpredictability associated with human visual examination is achieved.

Furthermore, CAD systems have the potential to offer benefits in terms of cost-effectiveness and productivity. CAD systems possess the capability to improve patient outcomes and simultaneously reduce healthcare costs. The reason for their popularity is their ability to obviate the requirement for invasive procedures and furnish more precise diagnoses. Furthermore, the integration of computer-aided design systems into pre-existing electronic health record (EHR) systems is a possibility. The system enables rapid retrieval of patient information and facilitates seamless communication among healthcare professionals.

1.3. Literature review

CAD systems have been the subject of a number of studies that have shown their potential to improve diagnostic accuracy for skin cancer.

Bechelli et al. [18] compared ML and DL skin tumor classification models. The study tested Gaussian naive Bayes, decision tree, logistic regression, k-nearest neighbors classifier, linear discriminant analysis, and DL models using a custom CNN model or transfer-learning models (Xception, ResNet50 and VGG16). By precisions up to $\frac{88}{100}$, DL models outperforms ML models, whereas ML models have precisions under $\frac{72}{100}$ $\frac{72}{100}$, that boosts to $\frac{75}{100}$ via ensemble learning. A bigger, more unbalanced dataset is utilized for DL models. Pre-educated DL models accomplish great aimed at skin tumor arrangement, especially VGG16, that has an F-score of $\frac{88}{100}$, a precision of $\frac{88}{100}$, and metrics of 0.70 and 0.88 on the smaller database. These results imply that DL models, particularly pre-trained models, may reliably identify skin cancers and have therapeutic use.

Nawaz et al. [19] used a faster region-based convolutional neural networks (RCNN) and fuzzy k-means clustering (FKM) to segment early cutaneous melanoma in this article. Many medical photographs are tested to facilitate dermatologists, to distinguish this life-threatening state too soon. The provided technique preprocesses dataset photos to reduce noise and lighting problems and enhance graphical details previously utilizing faster-RCNN to produce the certain-length property vector. After that, FKM segmented the melanoma-affected skin with varying sizes and borders. The suggested strategy outperforms high-tech approaches on PH2, ISBI-2016 and ISIC-2017. The reported technique recognizes and segments skin lesions with 95.6 %,95.40 %, 93.1 % and accuracy on the PH2, ISIC-2016 and ISIC-2017 datasets, in that order.

A system that is on the basis of web, called DUNEScan, is studied by Mazoure et al. [20] aimed at performing a uncertainty's profoundly investigation in widely employed skin cancer detection algorithms using convolutional neural networks (CNNs). The server provides an intuitive interface for the analysis. DUNEScan enabled users to upload an image of a skin wound and expeditiously compared the variance and mean assessments of various new and conventional CNN models. In addition, the UMAP and Grad-CAM algorithms are utilized by the web server to visualize the arrangement multiple aimed at the operator's input. This provided essential info around the proximity of the input to skin wound pictures from the widely utilized ISIC. The DUNEScan software can be accessed at no cost through the website https://www.dunescan.org.

Attique Khan et al. [21] provided a 2-stream deep neural network (DNN) info merge structure aimed at multiple-class of skin cancer diagnosis. First, a contrast that is on the basis of fusion improvement tactic delivered enhanced pictures to the pre-trained Densenet201 architecture. Skewness-controlled moth–flame optimization optimizes retrieved features. The property choice framework extracted and downsamples deep properties from the fine-tuned MobilenetV2 pre-trained network in the 2nd stream. A novel parallel multi max coefficient correlation tactic merged most discriminant properties from the two webs. A multiclass great LM (learning machine) arranger classified lesion pictures. 3 unstable skin facts collections— ISBI2018, ISIC2019 and HAM10000—were tested. Simulating without data augmentation yielded 96.5 %, 98 %, and 89 % accuracy. Our approach outperformed previous methods when compared fairly.

Razmjooy and Arshaghi [22] introduced a deep learning and metaheuristics-based skin cancer diagnostic approach. The approach used the multi-level optimum thresholding separation strategy that uses the input image histogram and a new enhanced bio-inspired technique developed by the Multi-agent Fuzzy Buzzard Algorithm (MAFBUZO). The MAFBUZO integrates local search agents in multi-agent classifications with the BUZO algorithm's global search proficiencies to optimize exploitation and exploration. To demonstrate the algorithm's productivity, it was validated with 4 test functions and compared to other bio-inspired techniques. The suggested MAFBUZO, with 2.7412, 16.3459–16, 7.3258e-5 and 9.6538, errors, had the lowest minimization error amounts. Following interest separation's area, pictures were added into an optimal MAFBUZO-based CNN aimed at property removal and diagnosis. The method was verified on DermIS and Dermquest datasets and were in comparison with extra methods. The suggested technique with 0.88, 0.95, 0.93, and 0.94 amounts aimed at PPV, NPV, Specificity, and Accuracy outperforms existing comparison methods. This strategy overcomes limitations such as being confined in limited optimum locations and raw convergence concerns.

The review highlights the importance of skin tumors' initial recognition and precise diagnosis, emphasizing the potential of machine learning (ML) and deep learning (DL) models in achieving this goal. The review further provides an overview of the types of skin tumors, their characteristics, and the challenges associated with their classification. The literature review in this work provides a comprehensive overview of the advanced in the ML and the DL models for skin tumor classification, highlighting their potential and limitations.

1.4. Motivation

Using solely DL processes aimed at skin tumor arrangement requires significant volumes of labeled data for model training. Data-hungry deep learning methods need many annotated pictures to train.

However, getting significant numbers of annotated medical photos may be difficult and time-consuming, especially for uncommon skin disorders or restricted image availability.

Deep learning models are unintelligible. Deep learning models learn complicated, hard-to-interpret data representations. In medicine, being able to explain a diagnosis is essential to earning trust and acceptance.

Deep learning algorithms may sometimes struggle to apply to fresh data or skin conditions. Deep learning models may perform poorly when applied to fresh datasets with different properties due to the quality and representativeness of the training data. Finally, deep learning models demand a lot of computer power, which limits their clinical use. Thus, combining deep learning with other machine learning approaches, clinical skill, and domain knowledge may overcome the limitations of deep learning alone for skin tumor classification.

1.5. Contribution

According to the diagnosing of the skin cancer, this research article's aim is to scrutinize the use of CAD. Specifically, our objective is to design and test a CAD system that, based on a combination of image processing and machine learning methodologies, is capable of correctly categorizing skin wounds as either malignant or benign. This study developed and tested a deep learning-based skin cancer diagnostic system. Gated Recurrent Unit Networks and the Improved version of Orca predation algorithm maximize the efficiency of the suggested system. The approach outperformed some other published techniques in different terms in Skin Cancer MNIST database simulations. Deep learning and metaheuristic optimization algorithms may help improve skin cancer diagnostic precision as well as effectiveness. The suggested approach might enhance patient outcomes and healthcare systems by diagnosing skin cancer early. This study advances skin cancer detection and might lead to improved precision and effectiveness of computer-aided diagnostic methods.

2. Data collection

There have been multiple datasets available aimed at the skin cancer' analysis and the various treatment strategies' validation. The dataset known as HAM10000 from the Skin Cancer MNIST was used for this study. Basal Cell Carcinoma, Melanoma, and Squamous Cell Carcinoma, are just some of the usual skin cancer's types. MNIST is a public collection of skin lesion photos that comprise 10,015 dermatoscopic images of skin wounds. These images include common skin cancer' forms such as, basal cell, squamous cell carcinoma, carcinoma, and melanoma. As part of the ISIC 2018 competition, which intended to build algorithms aimed at the automated skin cancer's recognition, the dataset was made accessible on Kaggle [23]. The overall goal of the challenge was to identify skin cancer.

The utilization of this dataset in the research offers a consistent and well annotated collection of photographs that can be used for both the training of the proposed autonomous diagnostic system and its subsequent evaluation. The generalizability of the suggested method is improved as a result of the extensiveness and variety of the dataset, which includes pictures of a variety of skin conditions, colors, and lesions. The dataset includes seven forms of skin lesions, namely: melanoma (mel), basal cell carcinoma (bcc), actinic keratoses and intraepithelial carcinoma/Bowen's disease (akiec), dermatofibroma (df), vascular lesions (angiomas, angiokeratomas, pyogenic granulomas, and hemorrhage (vasc)), benign keratosis-like lesions (solar lentigines/seborrheic keratoses and lichen planus-like keratoses (bkl)), and melanocytic nevi (nv). Fig. 1 shows Skin Cancer MNIST dataset's some model figures.

3. Materials and methods

The present research introduces a novel tactic for identifying skin cancer through the utilization of dermoscopy images. The methodology being suggested comprises 4 primary stages, namely preprocessing, injecting the preprocessed data into the Gated Recurrent Unit (GRU) network, optimizing the network efficiency through an improved version of Orca Predation Algorithm, and concluding with the categorization

3.1. Preprocessing

Preprocessing holds significant importance in the field of machine learning, particularly in skin cancer detection. The study employed various preprocessing techniques such as median filtering, random oversampling (ROS), and image resizing.

The application of median filtering in image processing serves as a technique for decreasing noise, thereby enhancing the overall quality of the images and minimizing the influence of artifacts on diagnostic outcomes.

Random oversampling and data augmentation are established techniques employed to handle the difficulty of class disparity in medical data sets, a prevalent challenge encountered in such datasets. Through the implementation of oversampling techniques on the minority class, the authors have effectively augmented the dataset, resulting in better performance of the machine learning models.

The process of resizing images is employed to establish a uniform size for the images, thereby aiding in the training of models and enhancing their capacity for generalization.

Preprocessing techniques can be employed in skin cancer diagnosis to improve image quality and mitigate challenges like class imbalance and dataset variability. Various methods, including contrast enhancement, color normalization, and image registration, can be employed to

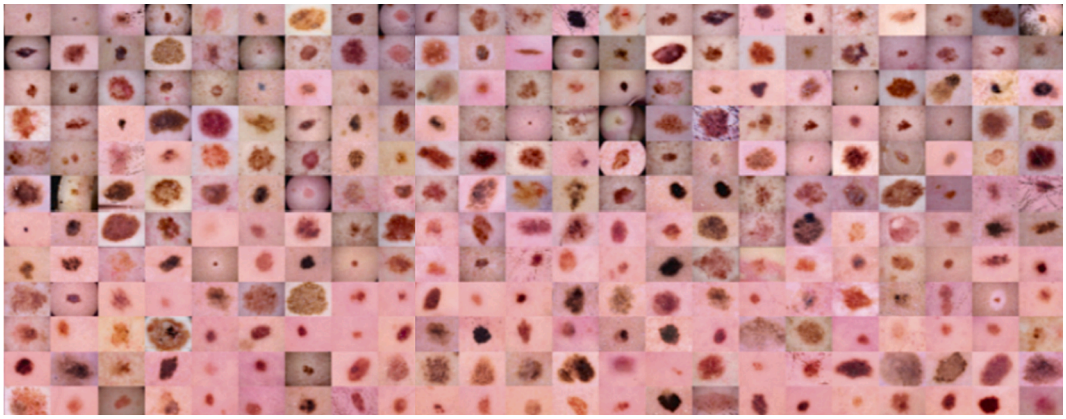

Fig. 1. Some sample images of Skin Cancer MNIST dataset.

homogenize the visual characteristics of images and mitigate the effects of inconsistencies such as lighting and camera configurations. Furthermore, methods such as oversampling can be employed to tackle class imbalance and augment the sample size in the dataset, thereby enhancing the precision of the machine learning algorithms.

3.2. GRU (Gated Recurrent Unit) Network

The GRU (Gated Recurrent Unit) network is a variant of Recurrent Neural Network (RNN) architecture that is particularly adept at handling sequential data, including but not limited to time-series and textual data. The aforementioned study employed a GRU network to conduct feature extraction on the preprocessed data. The back-propagation through time (BPTT) technique was employed to train the GRU network in order to acquire the most pertinent features for the identification of oral cancer. Deep learning models, such as the GRU network, have been found to be useful in determining skin cancer by extracting pertinent features from images. Through the utilization of extensive datasets of annotated skin lesion images, the models can acquire the ability to discern distinctive patterns and features that are suggestive of various forms of skin cancer. This measure can potentially enhance the precision of diagnosis and expedite the identification of cutaneous malignancies.

3.3. Improved Orca Predation Algorithm

The Improved Orca Predation Algorithm is a metaheuristic optimization algorithm that draws inspiration from the predatory tactics of killer whales. The aforementioned study employed an algorithm to enhance the efficacy of the GRU network. The algorithm was employed to explore the most advantageous combination of hyperparameters for the GRU network, including but not limited to the learning rate and quantity of hidden layers.

Metaheuristic optimization algorithms, such as the Improved Orca Predation Algorithm, can be employed in the skin cancer's analysis to enhance the efficacy of ML samples. Through the process of hyperparameter optimization, it is possible to fine-tune models and enhance their accuracy and efficiency. Enhancing the diagnostic performance of models can aid in the advancement of more precise and effective diagnostic systems for skin cancer. Finally, the optimized GRU network was utilized for the skin cancer cases' final arrangement. The suggested technique's block diagram aimed at the skin cancer identification using a GRU network with IOPA optimization approach is illustrated in Fig. 2.

The utilization of preprocessing techniques, DL(deep learning) samples namely the GRU network, and optimization algorithms such as the Improved Orca Predation Algorithm can help to enhance the skin cancer diagnosis' accurateness and productivity. These techniques can be applied to large datasets of annotated skin wounds pictures to extract properties that are relevant for diagnosis and develop more accurate and efficient diagnostic systems. In the following, the method for each process has been explained in details:

4. Images preprocessing

4.1. Median filtering

Median filtering is a spatial filtering method that is commonly employed in the field of image processing for reducing noise built into digital images. The operational principle involves the substitution of the numerical value assigned to each individual pixel with the median numerical value of the adjacent pixels. The utilization of median filtering has been found to be highly efficacious in the abolition of pepper and salt noise, a noise's form that manifests as randomly scattered white and black dots across an image.

Median filtering can be used as a viable technique for reducing noise in skin cancer dermoscopy images that arises from various sources,

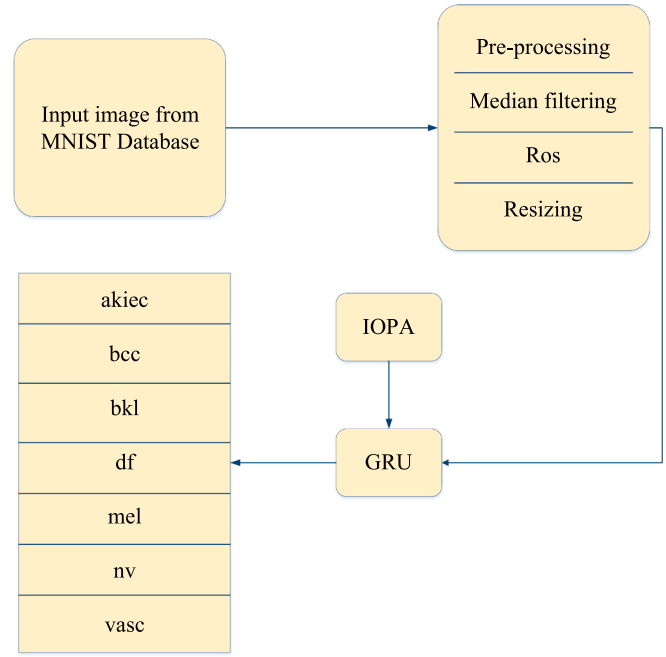

Fig. 2. Block diagram of the suggested technique for the skin cancer identification using a GRU network with IOPA optimization approach.

including speckle noise, non-uniform illumination, and camera artifacts. Speckle noise is a form of noise that arises due to the reflection of light from the surface of the skin. Conversely, non-uniform illumination can result in fluctuations in the brightness levels throughout the image. The quality of images can be affected by camera artifacts, including sensor noise and distortion.

The implementation of median filtering on dermoscopy images of skin cancer can effectively mitigate the influence of noise and artifacts, thereby enhancing the accuracy of diagnosis. This approach may enhance the precision of the diagnosis and expedite the timely identification of cutaneous malignancies. It is noteworthy that an overabundance of filtering may result in the forfeiture of significant image particulars and subsequently impact the diagnostic efficacy. Hence, it is crucial to employ suitable filtration parameters and assess the effect of filtration on the diagnosis.

The fundamental concept underlying median filtering involves the presentation of a $m \times n$ neighborhood, whereby all neighborhoods are arranged in rising order. Subsequently, the central pixel is replaced and the ordered numbers' median assessment is selected. The present approach is exemplified by the subsequent model:

$$y_{(m,n)} = median\left[x_{(i,j)}, (i,j) \in C\right] \tag{1}$$

where $y_{(m,n)}$ represents the median of the set of $x_{(i,j)}$ values for all (i,j) in the set C. The symbol C denotes the neighborhood centered at the location (m,n) within the image.

The present study employs the median filter technique for the purpose of eliminating digital noise from dermoscopy images of skin cancer. A filter mask of dimensions 5×5 has been utilized in this context.

4.2. Random oversampling

The technique of random oversampling (ROS) is employed as a means of minimizing class imbalance in a given dataset. Class imbalance is a phenomenon that arises when there exists a substantial discrepancy between the samples' number in 1 class and the samples' number in another class. In the skin cancer diagnosis' domain, an imbalance in class distribution may arise when the quantity of images depicting malignant lesions is significantly lower than that of images portraying

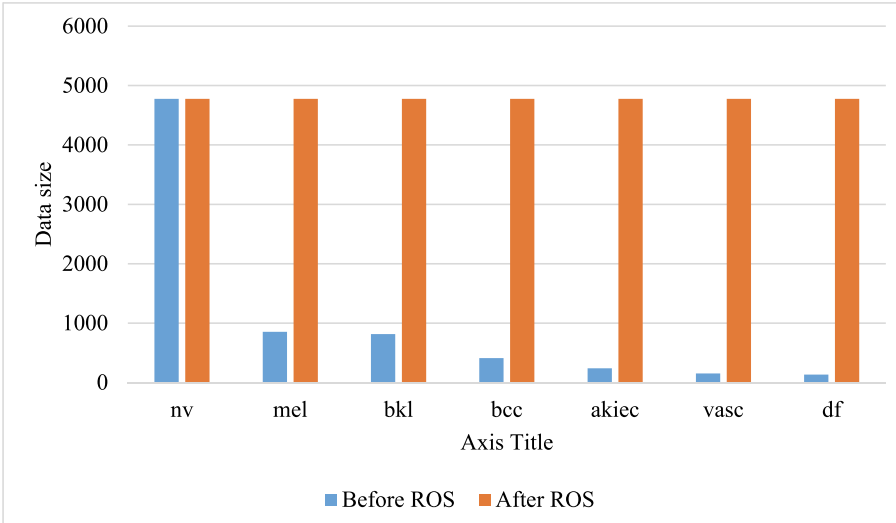

Fig. 3. Class distribution of a dataset before and after the implementation of an over-sampling technique.

benign lesions.

Random oversampling can be employed in a skin cancer diagnosis study by randomly duplicating samples from the minority class, which refers to malignant lesions, until an equilibrium is achieved in samples' number in every class. Thus, it is necessary to replicate certain cases with fewer images in order to enhance the way they are represented within the dataset in this investigation. The less image samples that were oversampled were chosen randomly from the original dataset and duplicated until the number of samples matched that of the cancerous images. Fig. 3 illustrates the class distribution of a dataset before and after the implementation of an over-sampling technique.

4.3. Image resizing

The process of adjusting the dimensions of images in a given dataset to a uniform size is commonly referred to as image resizing. Image resizing could be utilized in the skin cancer's analysis to standardize the dimensions of images, thereby enhancing the efficacy of machine learning models and augmenting their capacity for generalization.

Image resizing can be employed in a skin cancer detection study to standardize the size of images within the dataset. The process entails the adjustment of all images to a uniform size, typically 299x299 pixels. The process of altering the dimensions of an image can be executed through a multitude of libraries and packages available in programming languages, including MATLAB. The Pillow library offers image resizing functionalities.

Preservation of the aspect ratio of images is crucial subsequent to their resizing in order to prevent any potential distortion. The desired outcome can be attained through either the process of zero-padding the images or by cropping the images to the intended size.

The act of resizing images can serve as a means to decrease the computational burden associated with the training of ML (machine learning) samples. Training DL (deep learning) samples could be impeded by the memory and computational resources required to train large images. The reduction of memory and computational demands of models and acceleration of the training process can be achieved by downsizing the images.

It is noteworthy that image resizing serves the purpose of standardizing image size and minimizing the computational cost of the process training. However, it is imperative to acknowledge that this process may result in the loss of crucial image features, thereby potentially impacting the diagnostic efficacy of the models. Consequently, it is imperative to employ suitable resizing methodologies and assess the influence of resizing on the efficacy of the models by utilizing different metrics.

5. GRU (Gated recurrent unit) networks

The GRU (Gated Recurrent Unit) networks represent a variant of the Recurrent Neural Network (RNN) architecture, which was specifically designed to overcome the limitations of conventional RNNs, including the issue of vanishing gradient. GRUs (Gated Recurrent Units) exhibit resemblance to LSTM (Long Short-Term Memory) networks, albeit with a less complex structure, thereby potentially rendering them more computationally expedient. Fig. 4 depicts the primary architecture of the GRU cell.

The following is a comprehensive elucidation of the constituents and operations of a GRU (Gated Recurrent Unit) network.

5.1. Gates

Gated Recurrent Units (GRUs) are equipped with a two gates, namely the renewal gate (z) and the rearrange gate (r). These gates' occupation is to adjust the data's transmission within the network, thereby facilitating the acquisition of enduring interdependencies by the model.

5.2. Update gate (z)

The update gate is a crucial component in determining the extent to which the preceding hidden state is propagated to the present hidden state. The function in question is a sigmoidal function that produces output values within the range of 0 to 1. A hidden state with a value in proximity to 0 implies that it is predominantly disregarded, whereas a hidden state with a value in proximity to 1 implies that it is predominantly preserved. This stage's formulation is defined as a next equation:

$$z_t = \sigma(W_z \times x_t + U_z \times h_{t-1} + b_z) \tag{2}$$

where, the notation x_t represents the input at a given time step t, while h_{t-1} denotes the hidden state at time step $t-1$, The weight matrices W & U, along with the bias vector b, are integral components in the mathematical formulation of the model, and the notations z in subscript denote the update gate.

5.3. Reset gate (r)

The reset gate is a crucial component in determining the degree to

which the prior hidden state is incorporated with the present input for the purpose of generating a fresh candidate hidden state. The function in question is a sigmoidal function that yields output values within the range of 0 to 1. A value in proximity to zero indicates a significant disregard for the previous hidden state, whereas a value in proximity to one indicates a substantial consideration of the previous hidden state. This stage's formulation is defined as a next equation:

$$r_t = \sigma(W_r \times x_t + U_r \times h_{t-1} + b_r) \tag{3}$$

where, the notations r denote the reset gate.

5.4. Candidate hidden state ($\widetilde{h}$)

The $\widetilde{h}$ (candidate hidden state) is calculated as the product of the reset gate and the sum of the existing input and the former hidden state. The computation involves a hyperbolic tangent activation occupation's utilization, which produces output values within the limited between −1 to 1. This stage's formulation is determined as a next equation:

$$\widetilde{h}_t = tanh(W_h \times x_t + U_h \times (r_t \odot h_{t-1}) + b_h) \tag{4}$$

where, h specifies the candidate hidden state.

5.5. Hidden state (h)

The ultimate hidden state is the result of the update gate's modulation of the candidate hidden state and former hidden state. The selective retention or discarding of information from the previous hidden state enables the network to acquire knowledge of long-term dependencies This stage's formulation is specified as a next equation:

$$h_t = (1 - z_t) \odot \widetilde{h}_t + z_t \odot h_{t-1} \tag{5}$$

The process of forward propagation in a Gated Recurrent Unit (GRU) cell comprises a series of steps as follows:

Algorithm 1: Forward propagation in a Gated Recurrent Unit
Input: # - present input (x_t) # - prior hidden state (h_{t-1}) # - weights for update gate (W_u) and reset gate (W_r) # - bias for update gate (b_u) and reset gate (b_r) # Step 1: Calculate update and reset gates $z_t = concatenate(x_t, h_{t-1})$ $u_t = sigmoid(W_u \times z_t + b_u)$ $r_t = sigmoid(W_r \times z_t + b_r)$ # Input: # - present input (x_t) # - preceding hidden state (h_{t-1}) # - weights for candidate state (W_c) # - bias for candidate state (b_c) # Step 2: Calculate candidate latent state $z_t = concatenate(x_t, r_t \times h_{t-1})$ $c_t = tanh(W_c \times z_t + b_c)$ # Input: # - proposed latent state (c_t) # - antecedent latent state (h_{t-1}) # - update gate (u_t) # Step 3: Calculate ultimate latent state $h_t = (1 - u_t) \times h_{t-1} + u_t \times c_t$

5.6. Objective function

The valuation parameter for Gated Recurrent Unit (GRU) networks is determined by utilizing the mean square error of the obtained production values. Optimal network efficiency can be achieved by reducing the weight arrangement of the GRU networks. The symbol MSE is commonly used to denote the mean square error. The metaheuristic methodology proposed in the aforementioned paper was employed to minimize the given fitness function. The equation for calculating the mean squared error (MSE) is given by:

$$MSE = \frac{1}{\tau_{pop}} \sum_{j=1}^{\tau} \left(D_{ij} - Y_{ij}\right)^2 \tag{6}$$

where, τ denotes the test set's size. Y_{ij} and D_{ij} denote the predicted and actual values of the GRU networks, respectively. The term "pop" is utilized to refer to the size of the population that is being examined. The present investigation involved the development and application of a revised metaheuristic technique, denoted as Improved Orca Predation Algorithm, with the aim of reducing the mean squared error (MSE) function.

6. Improved Orca predation algorithm

6.1. Preliminaries

The main methods for making the offered technique will be discussed in this part. The main idea of OPA (Orca Predation Algorithm) and its Lévy flight procedure and formulation are designated in detail.

6.2. Orca predation algorithm (OPA)

Orca predation algorithm (OPA) is a metahistorical method. This method stimulates the preying orcas' behavior and is divided into 3 stages: moving, encircling, and assaulting. OPA gives numerous standards to the moving and surrounding in parameter modification to make a stability between the utilization and investigation procedures. In the assaulting stage, the most significant result might be specified without deleting the particles' diversity since considering many of the greatest orcas' situations and various selections of orcas on a random basis. The OPA's numerically is modeled in the next part.

A. Improvement of a orcas' settlement of N_n orcas' A group is utilized in Orca predation algorithm and indicated in 1D, 2D, 3D, or extra-dimensional space. It is determined by the next formula:

$$Z = [z_1, z_2, z_3, \cdots, zN_n] = \begin{bmatrix} Z_{1,1} & \cdots & Z_{1,2} & \cdots & Z_{1,dim} \\ \vdots & \ddots & \vdots & \ddots & \vdots \\ Z_{2,1} & \cdots & Z_{2,2} & \cdots & Z_{2,dim} \\ \vdots & \ddots & \vdots & \ddots & \vdots \\ Z_{N_n,1} & \cdots & Z_{N_n,2} & \cdots & Z_{N_n,dim} \end{bmatrix} \tag{7}$$

where the candidate results the orca individuals are determined by Z. The situation of the N_{th} member orca and the situation of the Nth member's Dim^{th} dimension are determined by zN_n and Dim, respectively.

B. Pursuing stage: This stage is partitioned into two phases: moving and surrounding. f_1 is utilized to adjust the orca acting's possibility on these 2 phases separately. It is a constant number that is selected randomly between [0, 1]. Providing that this amount is more than f_1, the moving procedure is done; otherwise, the surrounding procedure would be done.

C. *Moving procedure:* To stop the orca set from losing the goal, it is essential to adjust the orca set's focal situation and hold it close to the hunt. The orca's movement speed and the related situation are defined by the next equations:

$$V^t_{pursuit,1,i} = a \times (d \times z^t_{best} - P \times (b \times W^t + c \times z^t_i)) \tag{8}$$

$$V^t_{pursuit,2,i} = e \times z^t_{best} - z^t_i \tag{9}$$

where the repetitions' number is defined by t, $V^t_{\text{pursuit,1,i}}$ determines the pursuing speed since selecting the 1st pursuing phase. $V^t_{\text{pursuit,2,i}}$ determines the pursuing speed since selecting the 2nd pursuing. Furthermore, a, d , & b are random numbers that are range of 0, and 1. On the other hand, e is a random amount that is ranged between [0, 2], P is two, and h is a range of [0, 1] that is utilized aimed at selecting the pursuing method. Whilst the orca individual's average position is determined by W and is specified in the next Equation.

$$W = \frac{\sum_{i=1}^{N_n} z^t_i}{N_n} \tag{10}$$

$$c = 1 - b \tag{11}$$

There are 2 pursuing techniques depending on the orca's individual dimensions. Providing that the orca is big, namely (rand > h), the 1st procedure is done; then, if (rand ≤ h) the 2nd procedure is done that is defined by the next formula.

$$\begin{cases} z^t_{\text{pursuit,1,i}} = z^t_i + V^t_{\text{pursuit,1,i}} if \;\; rand > h \\ z^t_{\text{pursuit,2,i}} = z^t_i + V^t_{\text{pursuit,2,i}} if \;\; rand \le h \end{cases} \tag{12}$$

D. *Surrounding the hunt in this phase*, the orcas renew utilizing the situations of 3 randomly orcas that are defined by the next equation:

$$z^t_{\text{pursuit,3,i,k}} = z^t_{d1,k} + u \times \left(z^t_{d2,k} - z^t_{d3,k}\right)) \tag{13}$$

$$u = 2 \times (randn - \frac{1}{2}) \times \frac{Maxrep - t}{Maxrep} \tag{14}$$

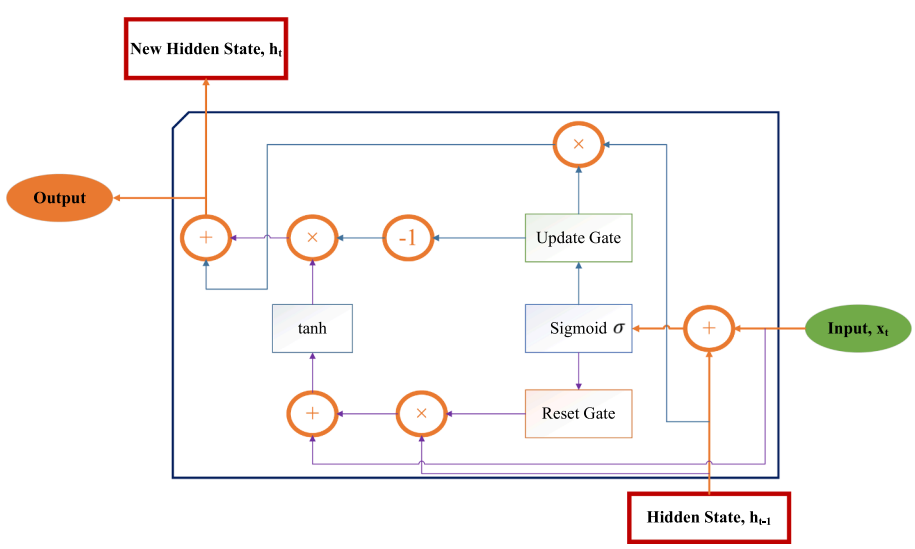

Fig. 4. Primary architecture of the GRU cell.

Table 1
Computer formation utilized for the tests.

Component	Specification
Processor	Intel Core i7-9700K, 3.6 GHz
RAM	16 GB DDR4
Operating System	Windows 10, 64-bit
Programming Language	MATLAB R2017b

where *Maxrep* is the max repetition amounts, $d1$, $d2$, and $d3$ determine the 3 randomly certain orcas from N_n orcas and $d1 \neq d2 \neq d3$. The situation since choosing the 3rd pursuing procedure is shown by $z^t_{\text{pursuit},3,i,k}$.

E. Situation alters throughout the surrounding stage The situations are regulated regarded to the next formula equations:

$$\begin{cases} z^t_{\text{pursuit,i}} = z^t_{\text{pursuit},i} if \;\; p(z^t_{\text{pursuit,i}}) < p(z^t_{\text{i}}) \\ z^t_{\text{pursuit,i}} = z^t_i if \;\; p(z^t_{\text{pursuit,i}}) \geq p(z^t_{\text{i}}) \end{cases} \tag{15}$$

where $\text{p}(z^t_{\text{i}})$ is the cost value related to z^t_{i} and the cost value related to $z^t_{\text{pursuit,i}}$ is defined by $\text{p}(z^t_{\text{pursuit,i}})$.

F. *Assaulting of hunt:* The 4 best-assaulting situations in a ring are determined with 4 orcas. A next formulas specify the orca's position and motion speed throughout an assault.

$$V^t_{assault,1,i} = 0.25 \times \left(z^t_1 + z^t_2 + z^t_3 + z^t_4\right) - z^t_{pursuit,i} \tag{16}$$

$$V^t_{assault,2,i} = \frac{1}{3} \times \left(z^t_{pursuit,d1} + z^t_{pursuit,d2} + z^t_{pursuit,d3}\right) - z^t_i \tag{17}$$

$$z^t_{assault,i} = z^t_{pursuit,i} + g_1 \times V^t_{assault,1,i} + g_2 \times V^t_{assault,2,i} \tag{18}$$

where $V^t_{\text{assault,1,i}}$ & $V^t_{\text{assault,2,i}}$ are defined as the speed vectors, the 4 orcas in the greatest situation are defined by z^t_1, z^t_2 , z^t_3 and z^t_4. $d1$; $d2$; and $d3$ are the 3 randomly selected orcas from N_n in the pursuing stage and $d1 \neq d2 \neq d3$. $z^t_{\text{assault,i}}$ recognizes the situation since the assaulting procedure, g_1 and g_2 are random numbers that are ranged between [0, 2], and [-2.5, 2.5], respectively.

G. *Situation alters throughout the assault stage* The situation of the orca is specified by the problem's lower limit l_l that is determined by the next outline:

Table 2
Studied algorithms' parameter value in this research.

Algorithm	Parameter	Value
Sine Cosine Algorithm (SCA) [24]	Search agents	90
	Number of elites	1
	Number of generations	800
Multi-verse optimizer (MVO) [25]	WEP_{min}	0.1
	WEP_{max}	2
	$Coefficient\,(P)$	8
Owl Search Algorithm (OSA) [26]	T_{dead}	25
	$\lvert P \rvert$	15
	Acc_{low}	0.1
	Acc_{high}	2
Pigeon-inspired Optimization Algorithm (PIO) [27]	Number of Pigeons	400
	Space dimension	50
	Map and compass factor	0.1
	Map and compass operation limit	80
	Landmark operation limit	800
	Inertia factor (w)	1
	Self-confidence factor (c_1)	1
	Swarm confidence factor (c_2)	1

Table 3
The offered IOPA's result values in comparison with other studied processes.

Benchmark		IOPA	SCA [24]	MVO [25]	OSA [26]	PIO [27]
F1	Mean	0.00	3.41	4.00	3.20	3.99
	StD	0.00	0.91	2.07	2.16	3.20
F2	Mean	0.97	1.73	2.41	2.28	3.00
	StD	0.99	2.04	2.09	2.48	2.30
F3	Mean	0.00	0.00	0.00	0.00	0.00
	StD	0.00	0.00	0.00	0.00	0.00
F4	Mean	0.05	0.05	0.13	0.35	0.08
	StD	0.02	0.03	0.04	0.20	0.04
F5	Mean	0.00	4.39	5.14	4.93	4.57
	StD	0.00	2.84	1.84	2.17	3.23
F6	Mean	0.04	8.87	7.83	7.43	5.79
	StD	0.00	4.34	3.62	6.75	6.76
F7	Mean	0.00	5.05	5.75	4.88	5.60
	StD	0.47	4.03	6.32	4.23	4.37
F8	Mean	0.00	0.24	5.55	7.12	8.90
	StD	0.00	0.11	2.49	5.56	5.59
F9	Mean	0.00	0.00	0.50	0.25	0.40
	StD	0.00	0.00	0.44	0.08	0.24
F10	Mean	0.00	0.22	0.54	0.43	0.66
	StD	0.00	0.16	0.27	0.22	0.38

Algorithm 2: Situation *altering*

$if\ \text{p}(z^t_{\text{pursuit,i}}) < \text{p}(z^t_{\text{i}})$

$Z^{t+1}_{\text{i}} = z^t_{\text{assault,i}}$

Else $\quad Q = randn$

For k from 1 to D

If $Q < f2$

$z^{t+1}_{\text{j,k}} = l_l(k)$

Else

$z^{t+1}_{\text{j,k}} = z^{t+1}_{\text{pursuit,i,k}}$

End

End

End

where f2 is an amount that is between [0, 1]. Taken together, the next phases demonstrate the operation of the OPA procedure.

Algorithm 2: The flowchart of OPA
Step 1: Orca populations and the parameters are initialized; the population's number N_n, dimension Dim, the repetitions' max number $Maxrep$, selection probability $f1$, $f2$, lower limit l_l, and upper limit u_l . The orcas' situations are determined randomly by $l_l$and u_l.
Step 2: Every orca's cost value is specified, and the optimal cost is designated as Z_{best}.
Step 3: The orca set's situation is renewed throughout the pursuing phase. Reliant to the $f1$ as the choice factor, orcas choose whether to move or surround the hunt at this phase. The situations are renewed.
Step 4: The orcas altered their situations in the assaulting stage. The situations are renewed, and their situations are substituted by l_l as revealed.
Step 5: Since the assaulting procedure, the novel population would become larger in a novel set.
Step 6: End standards: if the existing repetition number surpasses the permissible number of repetitions, the procedure is finished. If the optimal production result is not obtained, Step 2 of the past processes would be done again.

6.3. IOPA (Improved Orca Predation Algorithm)

In the offered work, we aim to provide an improved version of the Orca Predation Algorithm (OPA). We propose modifying the algorithm by combining Opposition-based Learning (OBL) and chaos theory (sinusoidal map) to improve its performance.

The reason for modifying the OPA algorithm is that while it has shown promising results in optimization problems, it still has room for improvement in terms of convergence speed, accuracy, and robustness. By incorporating OBL and chaos theory, we hope to address these limitations and enhance the performance of the algorithm.

The Opposite-Based Learning (OBL) method is utilized to augment the exploration and exploitation capabilities of metaheuristic algorithms. This is achieved by incorporating a search direction that is opposite to the current direction of search. The OBL algorithm conducts bidirectional searches within the solution space to enhance search diversity and prevent entrapment in local optima. The integration of OBL into the OPA algorithm is anticipated to enhance its exploration capabilities and yield superior solutions.

The primary modification is founded upon the Opposition-based learning (OBL) methodology. As per the OBL methodology, a proposed solution candidate is posited as a pair of candidates, with the location of each candidate being complementary to the other. The following equation provides an explanation of the aforementioned concept.

$$Z_i^t(new) = \overline{Z}_i + \underline{Z}_i - Z_i^t \tag{19}$$

where, $\underline{Z}_i$ and $\overline{Z}_i$ signify the min and the max amounts of vector Z_i^t, respectively.

The notation $Z_i^t(new)$ represents the opposite point of Z_i^t. The optimal resolution of each prospective pair is retained while the alternative is discarded. The present study employs a stochastic process to randomly initialize 60 % of the population, while the remaining 40 % is initialized using the OBL approach.

Conversely, chaos theory is a mathematical construct that can be employed to produce simulated stochastic values and augment the variety of the exploration. The proposed modification employs a sinusoidal map for the purpose of generating pseudo-random numbers, which are subsequently utilized to perturb the search trajectory of the algorithm. The introduction of perturbation has the potential to facilitate the avoidance of local optima and facilitate the discovery of superior solutions. The integration of chaos theory into the OPA algorithm is anticipated to enhance its exploitation capabilities and yield superior solutions.

The second suggested technique is grounded in the principles of chaos theory, whereby quasi-random variables are generated in instead of entirely random variables. The implementation of this methodology is noted to augment the convergence speed of a meta-heuristic algorithm. A sinusoidal projection is employed for this purpose. By replacing the parameter r with a quasi-random variable, the resulting equation can be formulated in the following manner:

$$a(j+1) = \gamma \times a^2(j) \times sin(\pi.a(j)) \tag{20}$$

$$b(j+1) = \gamma \times b^2(j) \times sin(\pi.b(j)) \tag{21}$$

$$d(j+1) = \gamma \times d^2(j) \times sin(\pi.d(j)) \tag{22}$$

where a, b, and d represents a variable and γ is a constant equal 2.2 and $a = b = d = 0.5$.

The benefits of the suggested alterations are as follows:

1. The integration of OBL into the OPA algorithm enhances its exploration capabilities, enabling it to navigate a wider search space and circumvent the risk of being confined to local optima. This, in turn, can result in the derivation of superior solutions.
2. The integration of chaos theory into the OPA algorithm enhances its exploitation capabilities, resulting in improved efficiency in exploring the search space and identifying superior solutions.
3. The integration of OBL and chaos theory has the potential to enhance the search's diversity and optimize the algorithm's efficacy in identifying superior solutions.
4. The alterations made to the algorithm have the potential to enhance its robustness by augmenting its capacity to effectively address optimization problems that are noisy and complex.

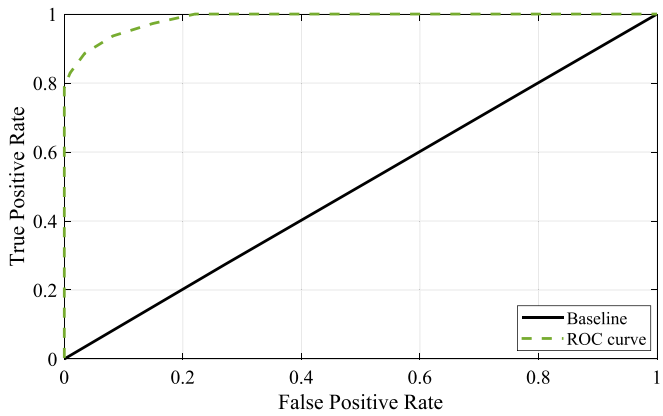

Fig. 5. ROC curve for the proposed GRU/IOPA model.

5. To summarize, the suggested alterations to the OPA algorithm by integrating OBL and chaos theory possess the capability to augment its efficiency, velocity of convergence, precision, and resilience. The aforementioned alterations may also enhance the variety of the search and augment the algorithm's proficiency in discovering superior solutions.

6.4. Validation of the improved Orca predation algorithm

6.4.1. Experimental setup

For confirming the effeciency of the offered IOPA (Improved Orca Predation Algorithm), a series of experiments on a set of standard benchmark functions were conducted. Table 1 illustrates the computer formation utilized for the tests.

6.4.2. Benchmark functions and comparative algorithms

The evaluation of the efficacy of an algorithm is an essential element of every optimization investigation. The efficacy of the proposed The IOPA was tested on ten test functions sourced from the "CEC-BC-2017 test suite." These test functions are widely employed for the purpose of evaluating the effectiveness of optimization methodologies and cover various characteristics, such as unimodal, multimodal, separable, and non-separable, to ensure a comprehensive evaluation of the proposed method. The research was centered on analyzing the initial ten functions, and the constraints on the decision variable bounds were set within the range of −100 and 100 to maintain parity with other algorithms.

To assess the effectiveness and efficiency of the IOPA, its proficiency was compared with five advanced metaheuristic algorithms, including Sine Cosine Algorithm (SCA) [24], Multi-verse optimizer (MVO) [25], Owl Search Algorithm (OSA) [26], and Pigeon-inspired Optimization Algorithm (PIO) [27]. Table 2 indicates the studied algorithms' parameter value in this research.

6.4.3. Experimental procedure and the results

Each algorithm, including the IOPA, was executed 20 times on all test functions to provide reliable and statistically significant results. The algorithms' proficiency was assessed on the basis of the following criteria:

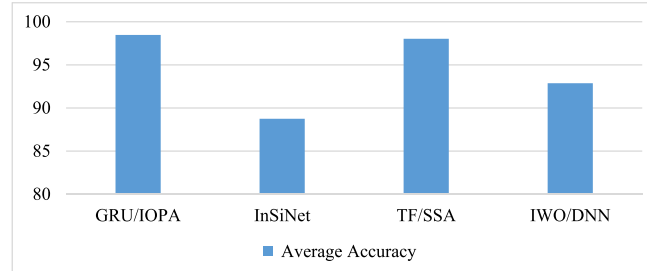

Fig. 6. Average mean value of the comparative methods.

- Mean solution (Mean): The average of the solutions found by the algorithm across all runs.
- Standard deviation (StD): The standard deviation of the solutions found by the algorithm across all runs, which indicates the consistency of the algorithm's performance.

Table 3 indicates the offered IOPA's result values in comparison with other studied processes.

The findings from Table 3 indicate that IOPA exhibits superior performance compared to the other algorithms, as evidenced by its higher mean values across the benchmark functions. IOPA exhibits the lowest mean values among all algorithms for the studied test functions. IOPA exhibits also notable performance on select functions in relation to standard deviation (StD) values, as evidenced by the attainment of StD values of about zero. This outcome is indicative of a high degree of consistency and reproducibility in the obtained results.

In brief, the investigational outcomes prove the Improved Orca Predation Algorithm's efficiency and robustness in solving complex optimization problems. The offered technique exhibits superior proficiency in comparison with the advanced algorithms, making it a promising candidate for solving real-world optimization problems.

7. Simulation results

In this section, the skin cancer diagnosis' outcomes based on the proposed algorithm have been validated and discussed. As mentioned before, the technique has been simulated on the basis of Matlab platform R2017b environment with aforementioned system configuration. The method is applied to the study was implemented on HAM10000 dataset utilizing some other distinct methods. The dataset for each class was

Table 5
Contrast of the, Specificity, PPV, Accuracy, NPV and Sensitivity amid the offered system and existing advanced systems.

Model	Sensitivity	Specificity	PPV	NPV	Accuracy
MA-Fuzzy-BA [22]	0.93	0.94	0.82	0.83	0.98
Dunescan [20]	0.92	0.61	0.61	0.77	0.88
Fuzzy-k [19]	0.93	0.81	0.66	0.82	0.99
Spotmole [32]	0.73	0.74	0.53	0.95	0.74
CNN-hc [34]	0.72	0.64	0.90	0.92	0.83
IGJOA [31]	0.72	0.87	0.64	0.98	0.89
MD^2N [35]	0.79	0.98	0.90	0.97	0.72
Inception-v3 [33]	0.77	0.77	0.73	0.91	0.89
GRU/IOPA	0.95	0.97	0.95	0.96	0.99

Table 4
The model's precision value aimed at each individual class (%).

Model	akiec	bcc	bkl	df	mel	nv	vasc	Average Accuracy
GRU/IOPA	98.15	98.37	97.48	97.98	98.91	99.30	99.08	98.08
InSiNet [13]	86.24	99.95	80.29	83.00	80.02	95.16	96.58	88.75
TF/SSA [14]	98.48	97.09	96.14	97.37	99.50	98.97	98.60	98.02
IWO/DNN [15]	84.62	96.08	97.13	81.05	96.14	98.52	96.56	92.87

partitioned into two subsets, namely the training and test set, with a proportion of approximately 80:20, where the training set organized $\frac{8}{10}$ of the data and the test set organized $\frac{2}{10}$ of the data. The dataset exhibited a class imbalance, whereby certain categories were represented by a greater number of instances than others. In order to address this issue, the division was carried out both in a proportionate and disproportionate manner. The images underwent resizing procedures tailored to each model. The dataset comprises a collection of 10,000 images depicting diverse skin cancer types, featuring seven distinct categories of skin lesions.

The Receiver Operating Characteristic (ROC) curve for the proposed model is presented in Fig. 5. This curve is constructed by plotting the true positive rate (TPR) against the false positive rate (FPR) at various threshold settings. Fig. 5 illustrates the Receiver Operating Characteristic (ROC) curve depicting the performance of the GRU/IOPA model proposed in our study.

Precision-recall curves are typically characterized by zig-zag patterns that frequently intersect, making it challenging to compare them. Consequently, we establish a perfect test scenario in which curves that pass or incline more towards the upper right corner represent the ideal precision and recall curves. For the proposed model, the precision and recall values are 1 and 0.97, respectively.

The present study employs an analytical approach that is based on 5 execution indices: sensitivity, specificity, positive predictive value (PPV), negative predictive value (NPV), and accuracy. These are determined in the next formulation:

$$accuracy = \frac{correctly \quad detected \quad cases}{total \quad cases} \tag{23}$$

$$Specificity = \frac{correctly \quad detected \quad healthy \quad skin \quad cases}{total \quad healthy \quad skin \quad cases} \tag{24}$$

$$PPV = \frac{correctly\, detected\, skin\, cancer\, cases}{detected \quad skin \quad cancer \quad cases} \tag{25}$$

$$NPV = \frac{correctly \quad detected \quad healthy \quad skin \quad cases}{detected\, healthy\, skin\, cases} \tag{26}$$

$$Sensitivity = \frac{correctly \quad detected \quad skin \quad cancer \quad cases}{Total \quad skin \quad cancer \quad cases} \tag{27}$$

The offered GRU/IOPA technique's accuracy was compared with 3 other deep learning-based methods, including: InSiNet: a deep convolutional approach [28], deep transfer learning and sparrow search algorithm (TF/SSA) [29], IWOA (Improved Whale Optimization Algorithm) with DNN sample (IWO/DNN) [30], on each individual class to show the proposed methods accuracy. The model's precision value aimed at each individual class is illustrated in Table 4.

The average mean of the comparative methods is shown also in Fig. 6 to provide an illustrative conception.

The findings of the study suggest that the proposed framework for skin lesion classification using GRU/IOPA has significantly improved the models' performance. Specifically, the accuracy value of the model for each individual class has shown notable enhancement through the utilization of the suggested framework. In other words, the experiment has demonstrated that the offered framework has improved the GRU/IOPA models' aptitude of to accurately organize skin wounds of different types. This is an important finding as accurate classification of skin wounds is vital aimed at the skin cancer's initial recognition and dealing.

The comparative analysis of the final outcomes was conducted with reference to 8 distinct techniques from existing literature, which encompassed a improved golden jackal optimization algorithm (IGJOA) [31], Dunescan [20], Spotmole [32], fuzzy k-means clustering (Fuzzy-k) [19], Multi-Agent Fuzzy Buzzard Algorithm (MA-Fuzzy-BA) [22], Inception-v3 [33], CNN-hc (convolutional neural network and handcrafted features based deep neural network) [34], and multi-class dilated D-net (MD^2N) framework [35] with a focus on their efficiency. Table 5 presents a contrast of the, Specificity, PPV, Accuracy, NPV and Sensitivity amid the offered system and existing advanced systems.

As can be observed from Table 5, the proposed GRU/IOPA model achieved a sensitivity of 0.95, specificity of 0.97, PPV of 0.95, NPV of 0.96, and accuracy of 0.99. Comparing these results with the existing techniques, it can be observed that the GRU/IOPA system outperformed most of the other methods in terms of sensitivity, specificity, PPV, NPV, and accuracy. It achieved higher or comparable values for these indices, indicating its effectiveness for skin cancer diagnosis. It is important to note that different techniques have different strengths and weaknesses, and the choice of the best technique depends on various factors such as dataset characteristics, computational requirements, and application requirements. However, based on the presented results, the GRU/IOPA system appears to be a promising approach for skin cancer diagnosis. Further discussions and analysis can be conducted to explore the reasons behind the superior performance of the GRU/IOPA system and to validate its efficacy on larger and more diverse datasets.

The results of the study provide evidence that the proposed framework can be a useful tool for dermatologists and medical professionals in accurately diagnosing skin cancer. This can ultimately lead to better patient outcomes and improve the overall quality of healthcare. However, further research is needed to validate the results on a larger and more diverse dataset and to optimize the proposed framework for better performance.

The study may not fully represent the diverse population and variations in skin lesions. This may impact the generalization of the results to real-world scenarios. The proposed method, GRU/IOPA, may not capture the full spectrum of skin cancer variations, and future studies should consider larger and more diverse datasets. The model's interpretability is challenging due to its complex deep learning algorithms, which may hinder its acceptance and integration into clinical practice. Clinical feasibility is also a concern, with factors like computational resources, time efficiency, and integration with existing diagnostic workflows needing optimization. Ethical considerations, such as patient data privacy and algorithm bias, are crucial for AI-based diagnostic systems. Future studies should address these ethical concerns and establish guidelines for responsible AI deployment in dermatology practice. Acknowledging these limitations encourages further research to develop robust and reliable approaches for skin cancer diagnosis.

8. Conclusions

Skin cancer is a potentially hazardous medical condition that necessitates timely identification for effective management. The present study suggested a robotic computer-aided method aimed at the skin cancer's initial diagnosis. The method proposed in this study utilizes a Gated Recurrent Unit Network, which was optimized through the Orca Predation Algorithm's enhanced version. Simulations were conducted on the Skin Cancer MNIST database to assess the suggested tactic's proficiency. The outcomes indicated that the suggested approach exceeds old-style approaches in different test measurements. The procedure that was proposed has the potential to be an effective tool for diagnosing skin cancer early. This has the potential to enhance patient outcomes while decreasing the burden on healthcare systems. Possible rewrite: The ability to generalize of the suggested approach to other skin cancer databases and the clinical implementation of the proposed method were potential topics for future research.

CRediT authorship contribution statement

Li Zhang: Conceptualization, Data curation, Formal analysis, Resources, Software, Writing – review & editing. **Jian Zhang:** Conceptualization, Data curation, Formal analysis, Resources, Software, Writing – review & editing. **Wenlian Gao:** Conceptualization, Data curation,

Formal analysis, Methodology, Resources, Software, Writing – review & editing. **Fengfeng Bai:** Data curation, Formal analysis, Resources, Software. **Nan Li:** Conceptualization, Data curation, Formal analysis, Methodology, Resources, Software. **Noradin Ghadimi:** Conceptualization, Formal analysis, Methodology, Software, Writing – original draft, Writing – review & editing.

Declaration of competing interest

The authors declare that they have no known competing financial interests or personal relationships that could have appeared to influence the work reported in this paper.

Data availability

No data was used for the research described in the article.

Acknowledgements

Science and Technology Innovation Project of Higher Education in Shanxi Province(Grant no.2020L0698) Science and Technology Innovation Project of Higher Education in Shanxi Province(Grant no.2023L371) Key Research and Development Program of Lyuliang City (2022GXYF16)

References

[1] Board, C.N.E. Melanoma: Statistics, 2023.
[2] X. Cai, et al., Breast cancer diagnosis by convolutional neural network and advanced thermal exchange optimization algorithm, Comput. Math. Methods Med. 2021 (2021).
[3] G. Guo, N. Razmjooy, A new interval differential equation for edge detection and determining breast cancer regions in mammography images, Syst. Sci. Control Eng. 7 (1) (2019) 346–356.
[4] D. Yu, et al., Energy management of wind-PV-storage-grid based large electricity consumer using robust optimization technique, J. Storage Mater. 27 (2020), 101054.
[5] Q. Liu, et al., Computer-aided breast cancer diagnosis based on image segmentation and interval analysis, Automatika 61 (3) (2020) 496–506.
[6] X. Fan, et al., Multi-objective optimization for the proper selection of the best heat pump technology in a fuel cell-heat pump micro-CHP system, Energy Rep. 6 (2020) 325–335.
[7] M. Rezaie, et al., Model parameters estimation of the proton exchange membrane fuel cell by a Modified Golden Jackal Optimization, Sustain. Energy Technol. Assess. 53 (2022), 102657.
[8] W. Jiang, et al., Optimal economic scheduling of microgrids considering renewable energy sources based on energy hub model using demand response and improved water wave optimization algorithm, J. Storage Mater. 55 (2022), 105311.
[9] Y. Kazemi, S.A. Mirroshandel, A novel method for predicting kidney stone type using ensemble learning, Artif. Intell. Med. 84 (2018) 117–126.
[10] Y. Xu, et al., Lung cancer diagnosis in CT images based on Alexnet optimized by modified Bowerbird optimization algorithm, Biomed. Signal Process. Control 77 (2022), 103791.
[11] M. Ghiasi, et al., A comprehensive review of cyber-attacks and defense mechanisms for improving security in smart grid energy systems: Past, present and future, Electr. Pow. Syst. Res. 215 (2023), 108975.
[12] N. Razmjooy, V.V. Estrela, H.J. Loschi, Entropy-based breast cancer detection in digital mammograms using world cup optimization algorithm, in: Research Anthology on Medical Informatics in Breast and Cervical Cancer, IGI Global, 2023, pp. 645-665.
[13] A.R. Gollou, N. Ghadimi, A new feature selection and hybrid forecast engine for day-ahead price forecasting of electricity markets, J. Intell. Fuzzy Syst. 32 (6) (2017) 4031–4045.
[14] L. Chen, et al., Optimal modeling of combined cooling, heating, and power systems using developed African Vulture Optimization: a case study in watersport complex, Energy Sources Part A 44 (2) (2022) 4296–4317.
[15] Z. Xu, et al., Computer-aided diagnosis of skin cancer based on soft computing techniques, Open Medicine 15 (1) (2020) 860–871.
[16] M. Dehghani, et al., Blockchain-based securing of data exchange in a power transmission system considering congestion management and social welfare, Sustainability 13 (1) (2021) 90.
[17] D. Bahmanyar, et al., Multi-objective scheduling of IoT-enabled smart homes for energy management based on Arithmetic Optimization Algorithm: A Node-RED and NodeMCU module-based technique, Knowl.-Based Syst. 247 (2022), 108762.
[18] S. Bechelli, J. Delhommelle, Machine learning and deep learning algorithms for skin cancer classification from dermoscopic images, Bioengineering 9 (3) (2022) 97.
[19] M. Nawaz, et al., Skin cancer detection from dermoscopic images using deep learning and fuzzy k-means clustering, Microsc. Res. Tech. 85 (1) (2022) 339–351.
[20] B. Mazoure, et al., DUNEScan: a web server for uncertainty estimation in skin cancer detection with deep neural networks, Sci. Rep. 12 (1) (2022) 179.
[21] M. Attique Khan, et al., A two-stream deep neural network-based intelligent system for complex skin cancer types classification, Int. J. Intell. Syst. 37 (12) (2022) 10621–10649.
[22] N. Razmjooy, A. Arshaghi, Application of Multilevel Thresholding and CNN for the Diagnosis of Skin Cancer Utilizing a Multi-Agent Fuzzy Buzzard Algorithm, Biomed. Signal Process. Control 84 (2023), 104984.
[23] Skin Cancer MNIST: HAM10000, K.S. Mader, Editor, 2018.
[24] S.M. Mirjalili, et al., Sine cosine algorithm: theory, literature review, and application in designing bend photonic crystal waveguides, in: Nature-Inspired Optimizers: Theories, Literature Reviews and Applications, 2020, pp. 201–217.
[25] S. Mirjalili, S.M. Mirjalili, A. Hatamlou, Multi-verse optimizer: a nature-inspired algorithm for global optimization, Neural Comput. Appli. 27 (2) (2016) 495–513.
[26] M. Jain, et al., Owl search algorithm: a novel nature-inspired heuristic paradigm for global optimization, J. Intell. Fuzzy Syst. 34 (3) (2018) 1573–1582.
[27] Z. Cui, et al., A pigeon-inspired optimization algorithm for many-objective optimization problems, Sci. China Inf. Sci. 62 (7) (2019), 70212:1-70212:3.
[28] H.C. Reis, et al., InSiNet: a deep convolutional approach to skin cancer detection and segmentation, Med. Biol. Eng. Comput. (2022) 1–20.
[29] H.M. Balaha, A.-E.-S. Hassan, Skin cancer diagnosis based on deep transfer learning and sparrow search algorithm, Neural Comput. Appl. 35 (1) (2023) 815–853.
[30] A.A. Malibari, et al., Optimal deep neural network-driven computer aided diagnosis model for skin cancer, Comput. Electr. Eng. 103 (2022), 108318.
[31] E.H. Houssein, et al., An efficient image segmentation method for skin cancer imaging using improved golden jackal optimization algorithm, Comput. Biol. Med. 149 (2022), 106075.
[32] C. Munteanu, S. Cooclea, Spotmole—Melanoma Control System. (2009).
[33] C. Szegedy, et al., Rethinking the inception architecture for computer vision. In: Proceedings of the IEEE conference on computer vision and pattern recognition, 2016.
[34] A.K. Sharma, et al., Dermatologist-level classification of skin cancer using cascaded ensembling of convolutional neural network and handcrafted features based deep neural network, IEEE Access 10 (2022) 17920–17932.
[35] M.D. Kumar, et al., Skin cancer segmentation with the aid of multi-class dilated D-net (MD2N) framework, Multimed. Tools Appl. (2023) 1–24.